Parts Breakdown

TOYOTA CELICA GT-FOUR

ITEM 58164

〈Damper〉

★Optional 3 step speed controller is included in kit exported to some countries and it is available separately. Item No. is 9415001. Speed control cover: 1805172.

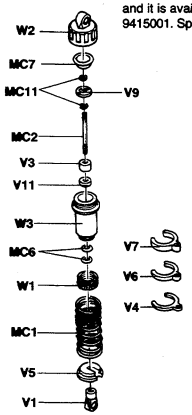

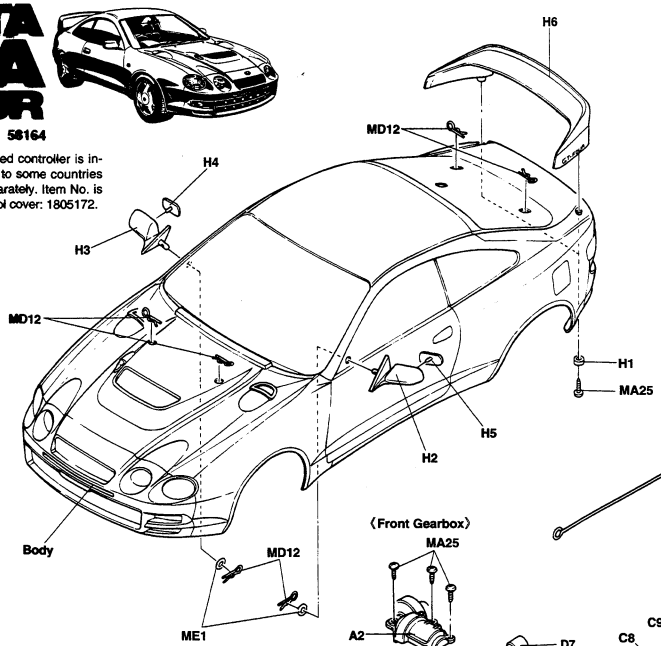

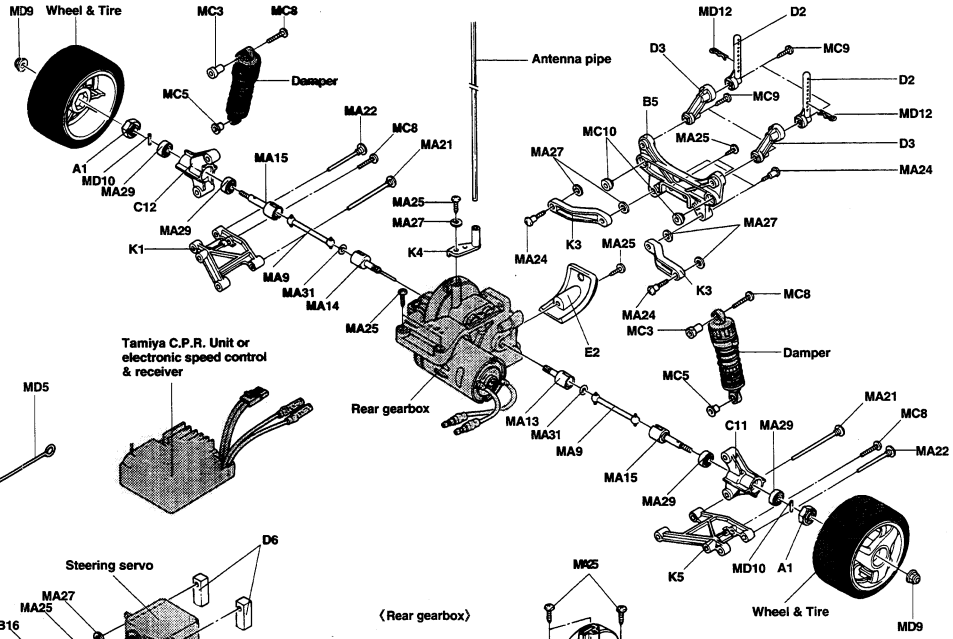

Tamiya C.P.R. Unit or electronic speed control & receiver

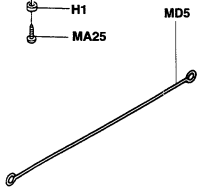

〈Front Gearbox〉

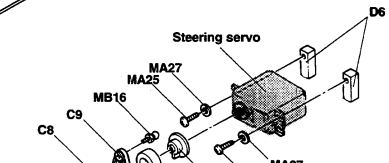

〈Rear gearbox〉

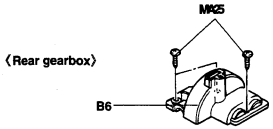

〈Front differential〉

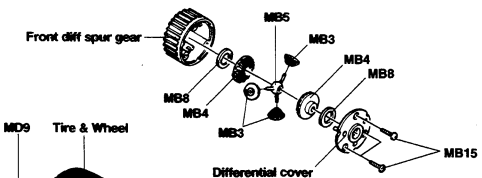

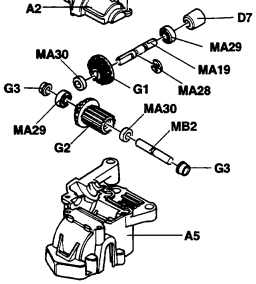

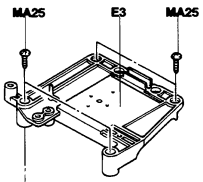

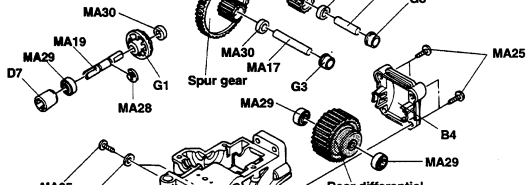

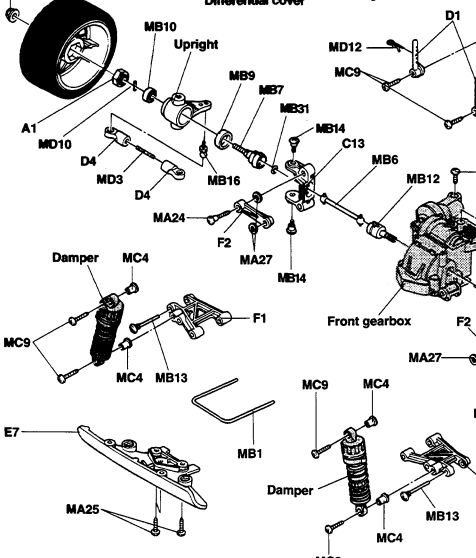

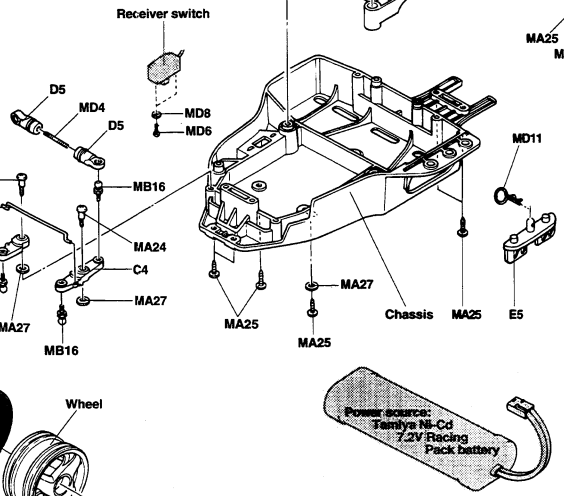

〈Rear differential〉

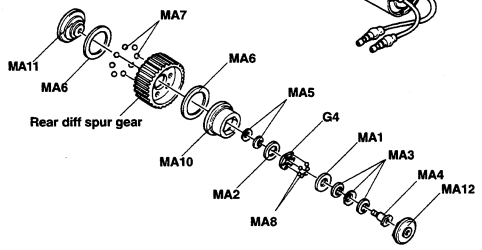

Power source: Tamiya Ni-Cd 7.2V Racing Pack battery

TAMIYA
TAMIYA PLASTIC MODEL CO.
3-CHOMEHARA, SHIZUOKA-CITY, JAPAN

1195 © 1995 TAMIYA

PRINTED IN JAPAN